OPERATION AND MAINTENANCE MANUAL

P/N: PL-M4328

ROCK SAFETY

THE LIFTER

The Lifter℠

Toll Free:
833-722-7292

www.rock-safety.com

5806 N 53rd St, Suite B-1
Tampa, FL 33610

Table of Contents

Section 1: Introduction

Safety 2
Specifications 5
Vehicle Requirements 6

Section 2: Installation

Lifter Installation 8
Magnet Installation 10

Section 3: Operation

Lifter Quick Guide 12
Operation 14
Stuck Covers 16
Maintenance 17

Section 4: Optional Accessories

Remote Control 19
Camera / Monitor 22
Swing Arm Attachment (Rigid) 27
Swing Arm Attachment (Folding) 30
Grate Attachment 32

Section 5: References

Parts & Service 34
500 Series Parts Drawing 35
3000 Series Parts Drawing 38
Wiring Diagram 41
Warranty 42

Section 1

Introduction

Safety

INTRODUCTION

PLEASE READ CAREFULLY

This manual is provided to familiarize you with the operation of The Lifter, and to supply you with the information necessary for proper equipment maintenance.

It is the user's responsibility to maintain and operate The Lifter in a manner that will result in the safest working conditions possible.

In addition, it is also the use's responsibility to be aware of existing Federal, State and Local codes and regulation governing the safe use and maintenance of this product.

Warranty will be void on any part of The Lifter when subject to misuse due to overloading, abuse, lack of maintenance or unauthorized modifications. No warranty – verbal, written or implied – other than the official published Rock Safety LLC new machinery and equipment warranty will be valid with this unit.

Treat the equipment with respect and service it regularly. This will result in a safer working environment and longer equipment life.

TAKE NOTE!

THIS SAFETY ALERT SYMBOL FOUND THROUGHOUT THIS MANUAL IS USED TO CALL YOUR ATTENTION TO INSTRUCTIONS INVOLVING YOUR PERSONAL SAFETY AND THE SAFETY OF OTHERS. FAILURE TO FOLLOW THESE INSTRUCTIONS CAN RESULT IN INJURY OR DEATH.

THIS SYMBOL MEANS
- ATTENTION!
- BECOME ALERT!
- YOUR SAFETY IS INVOLVED!

SIGNAL WORDS:

Note the use of signal words DANGER, WARNING and CAUTION with the safety messages. The appropriate signal word for each has been selected using the following guidelines:

DANGER: Indicates an imminently hazardous situation that, if not avoided, will result in death or serious injury. This signal word is limited to the most extreme situations typically for machine components that cannot be guarded for functional purposes.

WARNING: Indicates a potentially hazardous situation that, if not avoided, could result in death or serious injury, and includes hazards that are exposed when guards are removed. It may also be used to alert against unsafe practices.

CAUTION: Indicates a potentially hazardous situation that, if not avoided, may result in minor or moderate injury. It may also be used to alert against unsafe practices.

If you have questions not answered in this manual or require additional copies or the manual is damaged, please contact Rock Safety LLC.

OPERATE THE LIFTER SAFELY

Manhole covers and grates are heavy and can cause serious injury if accidentally dropped. All personnel should stand at least three feet away from the outside of the manhole cover, grate or any other object being lifted. DO NOT at any time, have hands or feet under the manhole cover, grate or any other object being lifted.

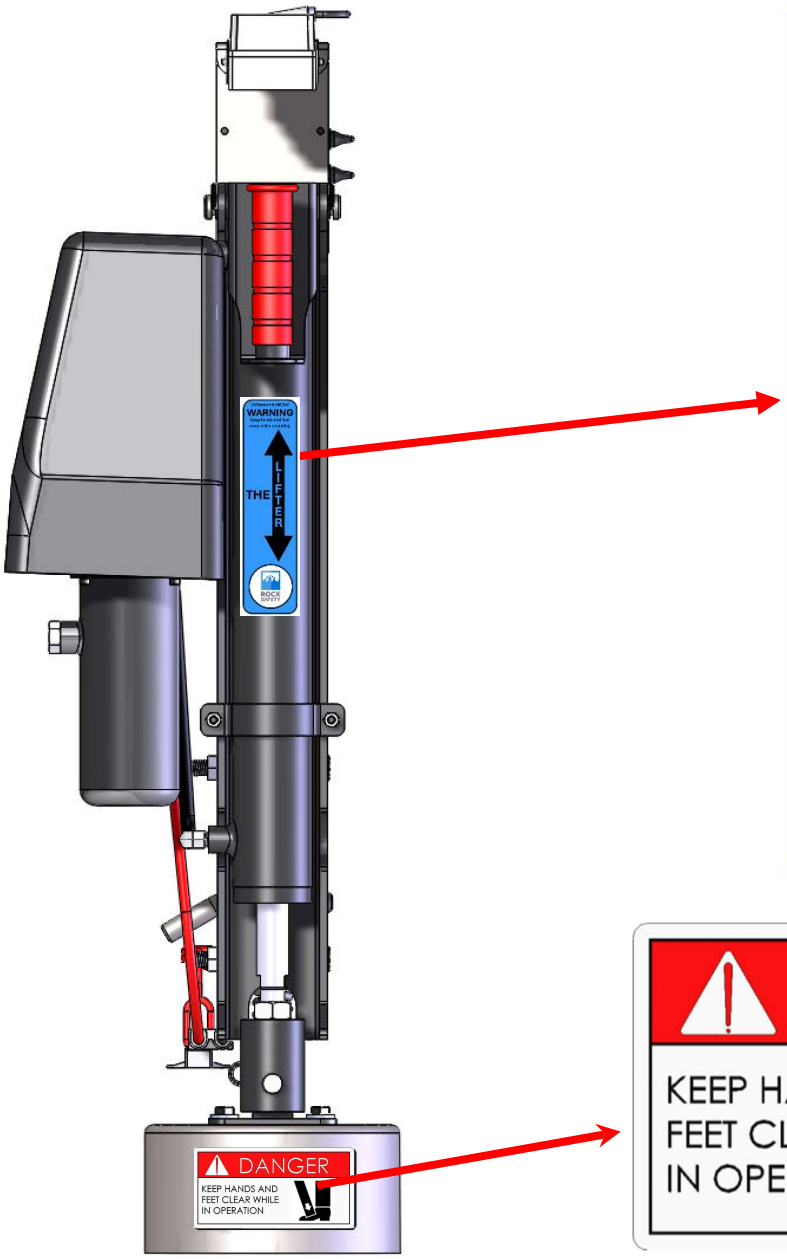

THE LIFTER - SPECIFICATIONS

	Standard	Plus
LIFTER		
Weight	32 Lbs	32 Lbs
Length (With Camera & Magnet)	38 Inches	38 Inches
POWER UNIT		
Amperes	95 amps	95 amps
2" Bore X 18" Stroke	Yes	Yes
Adhesion (metal to metal)	Yes	Yes
Pressure Square Inch	2,700 PSI	2,700 PSI
Pull Capacity	6,350 lbs	6,350 lbs
Push Capacity	8,475 lbs	8,475 lbs
MAGNET		
Weight	47 lbs	4 lbs
Diameter with connector	8 Inches	8 Inches
Amps	8 Amps	17 Amps
Voltage	12 volts	12 volts
Working Capacity	2,500 lbs	3,500 lbs
CAMERA/MONITOR (OPTION)		
Color Camera - High Density	Yes	Yes
Infra red LEDS	Yes	Yes
Heated with Audio Feed	Yes	Yes
Accepts up to 2 Cameras	Yes	Yes
High Resolution - Pixels	Yes	Yes
7" Inch Digital Screen	Yes	Yes
GENERAL SPECS		
Lifting capacity	300 lbs	600 lbs
Voltage	12 Volts	12 Volts
Vehicle Receptical	2" Hitch	2" Hitch
Frame - Adjustable Height	Yes	Yes
Cylinder Stroke	18 Inches	18 Inches
Lifter WT w/o Magnet	62 lbs	62 lbs
Gloss Black Power Coating	Yes	Yes
Minimum Vehicle Capacity	1/2 T. - 1500	3/4 T. - 2500
Vehicle Battery Capacity	650 Amps	800 Amps
Remote - Waterproof	Yes	Yes
OPTIONAL		
Swing Arm	40 lbs	43 lbs
Grate Attachment	24 lbs	24 lbs

Vehicle Requirements

The Lifter[SM] Specifications

- Runs off standard 12-volt battery
- Fits into 2" hitch receiver, disconnects quickly and easily
- Hydraulic power unit
- 3,000 lb. of lift force
- 7,000 lb. of down pressure
- Custom-made hydraulics and cylinder
- Wireless remote with transmitter
- Electro-magnet with 6' disconnect cord
- 5,000 lb. gripping cap. (metal to metal)
- Camera – Color image
- Infra-red
- Waterproof connection/cable
- Monitor – 5.6" diagonal flat screen
- Color LCD
- Resolution 270,000 pixels
- Capacity for additional camera

Vehicle Compatibility Requirements

CAUTION

The Lifter operates with up to 3,000 lbs of lifting force. The Lifter must be attached to vehicles capable of supporting the expected forces applied during the process of removing and replacing manhole covers. The Lifter should be attached to a minimum of a Class 3 trailer hitch. Any vehicle used to operate The Lifter must have frame, suspension systems and attachment points capable of supporting the 3,000 lbs of force.

Rock Safety LLC assumes no liability for damage to any vehicle that is used with The Lifter that does the chains will keep the load secure.

Section 2
Installation

Lifter Installation

These instructions are intended as a guide to assist you with The Lifter installation. We cannot cover every make, model and year of truck manufactured worldwide, so these instructions will provide only general information.

1. Attach the frame riser (P-42A) to the frame (P-42), using the 2-½" bolts. Slide the lifter frame into the 2 inch receiver, pin or bolt into place. The lifter can be installed on the front or the rear of a vehicle.

    a. Frame Riser can be installed with long leg facing up or down depending on height requirements per vehicle's receiver.
    b. Approximate height from underside of battery mount to ground is 13 to 15 inches. Final height must be check after battery is installed.

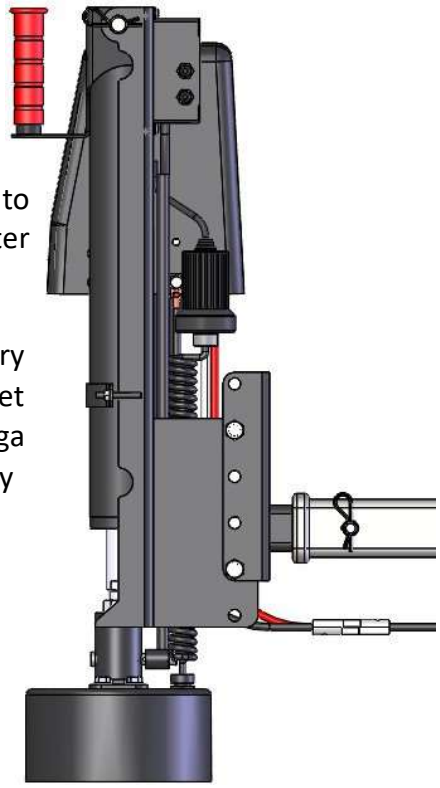

2. Cut the wires (P-62A/B) to length needed to reach the battery and solder on supplied copper eyelets. Solder the 5/16" eyelet to the black wire and the ¼" eyelet to the red wire. Run the 6 ga red wire to one side of the 50 amp breaker; connect the battery lead to the positive side of the battery. Run the black wire to the negative side. Plug the Anderson connectors together from the vehicle to the lifter.

3. Remove plug from elbow fitting on manifold and insert breather valve (attached to The Lifter motor) before operating.

4. Place the magnet (P-10) below the cylinder and lower the rod down until the magnet attachment plate touches the magnet by using the remote transmitter (the transmitter must be turned on). Line up the four bolt holes and insert the bolts that attach the plate to the magnet. Connect the yellow cord (P-13) to the magnet

5. When the magnet is in the raised position, make sure there is a minimum of 9 inches of clearance from the bottom of the magnet to the ground.

6. Mount the camera to the mounting bracket on the top of The Lifter frame. The camera should be aligned to view the magnet. Wire the camera cable and power harness per enclosed manufacturer's directions. Mount the monitor inside the cab where desired.

7. To attach motor cover, slide cover from top over motor (opening to frame). Remove the bolt on the right side of the frame and be sure to support the hydraulic motor. Place the motor cover in front of the motor mount, line up the holes, and re-bolt the cover to the frame. Move to the left side of the frame and remove the top bolt. Place the cover over motor mount, line up the holes and re-bolt. The cover is flexible which will allow you to bolt one side at a time.

8. **TEST ALL FUNCTIONS.**

The Lifter is attached directly to the vehicle's 12V electrical system. Twenty (20) feet of power cable is included with The Lifter. The performance of The Lifter depends on the truck's electrical system. The use of low maintenance battery is not recommended. The recommended alternator and battery that will give the longest life with the most useful duty cycle is a 90 Amp alternator with a 200 minimum reserve, 700 cold cranking Amp battery. These specifications should be considered minimum. A typical power cable mounting and hookup is included in section 5.

CAUTION: Your electric/hydraulic Lifter is equipped with an electric motor rated for intermittent duty only! Caution must be taken not to overheat the motor, which could cause permanent damage to internal windings.

Duty cycle will vary with the change of the load requirements and Amperage draw. Heavier loads causing higher amperage draw will cause faster motor heat-up and will require longer cooling periods.

Approximate duty cycle at no load would be 1 MINUTE ON and 2 MINUTES OFF. Full load conditions would be approximately 1 MINUTE ON and 5 MINUTES OFF. Climate conditions will affect duty cycle intervals

Magnet Installation

When installing The Lifter Plus it is necessary to follow these instructions. When The Lifter has been installed into the vehicles hitch receiver and the electrical wires have been attached to the battery proceed as instructed:

1. Place the magnet directly below cylinder with the curly cord on the back toward the vehicle.

2. Using the remote lower the cylinder approximately 6 inches above the magnet.

3. Draw the curly cord through the back cavity of The Lifter and the base frame.

4. Slide the weather boot up on the upper cord.

5. Insert the male end (lower cord) to the female end (upper cord) and turn the lower connector ¼ turn to secure the connection.

6. Lower weather boot over the connector.

Section 3
Operation

Lifter Quick Guide

1. Drive toward the manhole cover until it disappears. Turn on the monitor and watch for the cover as it appears on the screen. Position the magnet directly in the middle of the cover if possible or if the cover has tar on it, place the magnet where there is bare metal.

2. With the Remote Transmitter, lower the magnet onto the cover, using the Cylinder DOWN arrow button. Energize the Magnet using the Magnet ON button.

3. With the Remote Transmitter, raise the magnet with the cover all the way up, using the Cylinder UP arrow button and drive forward or backwards two or three feet. Make sure the cover is clear of the casting before moving.

4. With the Remote Transmitter, lower the magnet with the cover to the ground, using the Cylinder DOWN arrow button and using the magnet OFF button, release the cover.

   - Always return the magnet to the up position to avoid the possibility of damage by moving the vehicle with the magnet at ground level.
   - The manufacturer recommends that the magnet not be on for longer than 3 minutes at a time. The transmitter will shut off the magnet after 5 minutes of activity and is set to shut down completely after 15 minutes of inactivity to save the transmitter battery.

KEEP HANDS AND FEET CLEAR WHILE OPERATING THE LIFTER!

Special Conditions

The Lifter motor has 3000 lbs of lift force with direct metal to metal contact. For best performance, The Lifter must have a clean metal contact surface on the manhole cover or drainage grate. The operator may at times encounter field conditions that will require attention for best results.

1. **DEBRIS ON MANHOLE COVER:** If the cover is completely tarred over, the magnet cannot adhere to the cover. Clean off the cover as thoroughly as possible over the entire cover. Place the magnet over the cleanest area and engage The Lifter.

2. **ICE AND SNOW:** Clean ice and snow off manhole cover and grates to allow solid metal to metal contact between the cover and the magnet. If the cover is resistant to removal, with light to moderate tension on the cover by The Lifter, strike the top of the cover or perimeter of the grate with moderate blows with a heavy mallet or sledgehammer. This will break the ice bond, and the cover or grate should "pop off". Caution: DO NOT strike grates in the grate area. It may damage the grate. Always strike along the perimeter of the grate frame with moderate blows.

3. **STUCK COVERS:** At times, manhole covers and grates that have not been removed for long periods of time can be stuck in place. They can be bonded to the frame due to a variety of adhesive conditions. When this situation occurs, with light to moderate tension on the cover by The Lifter, strike the top of the cover or perimeter of the grate with a heavy mallet or sledgehammer as outlined under "Ice and Snow". This will typically break the bond, and the cover or grate should "pop off".

Detailed Operation

The Lifter Camera & Monitor

The Lifter and Camera are electrically mounted independently. The camera is live when the monitor is “powered “On”. It is best practice to power the monitor “On” when approaching job site.

When work is completed, power “Off” the monitor. The camera has a night light feature if at a time that it is necessary to locate a cover while dark. If there are multiple workers on the job site, the camera also has an audio feedback function. If monitor is left powered “On” at the end of the day, it will continue to draw charge from your battery.

Being independent The Lifter is “Off” when the remote is “Off”.

When powering up the Remote – hold the red power on button until the small light blinks on. Whenever the Remote is not in use you are to switch it” Off” as well. Remember the Remote has only four functions 1. Cylinder “Up & Down” 2. Magnet “On & Off”. Comment: the magnet is mounted on a swivel bracket. Its purpose is to conform to the surface or contour of the road or street while adhering to the lifting process.

The Lifter

The Lifter is powered by your vehicle battery and connected to the Lifter's power unit by a “Anderson Connector”. If for some reason you wish to disconnect the Lifter from the vehicle you will need to disconnect the connector. The magnet weight is approximately 50 lbs. and can be disconnected by lowering the magnet to the surface and removing the pin that goes through the magnet coupler, the magnet and the guide rod.

Using the remote to lift the cylinder while replacing the pin into the coupler and the guide rod. The Lifter can then be removed by pulling the pin at the receiver. The guide rod serves as an important function to the lifting process. The guide rod will keep the cover from rotating while being lifted.

Swing Arm

IMPORTANT

After lifting a cover or grate **use the tether rope** to swing the load from the opening. After having done so **lower the cover or grate to the surface and turn the magnet off**. There is a timed buzzer that will remind you (2 minutes) to lower the cylinder and release the load if not lowered the magnet will automating release the load. Tying the tether to the Swing Arm near the Lifter will ensure that the operator will not accidentally drop the weight and the possibility of causing injury.

Grate Attachment

The grate attachment is intended to be used when lifting rectangular grates usually having large openings. The grate attachment is mounted to the Lifter by lowering the magnet to the surface and pull the pin from the coupler. Once the magnet is free from the Lifter you can remove the four bolts on the magnet bracket and slide the grate attachment between the magnet and the coupler bracket and tightening by using the longer bolts provided. Lower the cylinder and connect the magnet to the Lifter.

When lifting a grate have the Lifter in as close to the center of the grate as possible and hook the two hooks as far to the outside as possible. There are two chains provided one on each side of the grate. Proceed by hooking the chain to the attachment on the magnet. Remember the chains are not to lift the grate. The magnet will do that. However, if the grate slips or for some reason loosen magnet grip

Stuck Covers

OPERATIONS BULLETIN
THE LIFTER & THE LIFTER PLUS

SITUATION: STUCK-IN-PLACE COVERS & GRATES

It is not uncommon to encounter network manhole covers and storm grates that are stuck-in-place and difficult to remove. This bulletin will provide di- rection on how to use the benefits of The Lifter and The Lifter PLUS to ad- dress this condition.

REMOVAL PROCESS:

A stuck-in-place cover or grate can be detected when you are attempting to remove the cover with The Lifter/Lifter PLUS and the suspension of the vehicle is being drawn. The cover is not coming off with abnormal suspension deflection. Stop the lift with the handheld remote but keep the upward tension on the cover. Strike the cover or grate with a mull or sledgehammer.

In most instances this will break the seal causing the adhesive condition and the cover/grate and the upward tension will cause the cover/grate to “pop” out.

Our customers tell us that in most cases this process successfully breaks the cover/grate free. These conditions are when The Lifter/Lifter PLUS add significant value to worker safety. Attempting to re- move stuck-in-place covers/grates manually place your field team in a high degree of injury risk.

Maintenance

1. Keep bottom of magnet clean, you may need to sand rust from bottom occasionally.
2. Keep camera lens clean, using soft cloth and glass cleaner
3. Watch hydraulic fluid level. With cylinder retracted, fill with hydraulic fluid until it comes out of the fill hole (use Dextron hydraulic oil)
4. TW Wireless transmitter:
    - Press and hold the power button on the transmitter until both LEDs turn on, then release. The green LED will flash rapidly when communication has been established with the receiver.
    - The transmitter is designed with power savings feature which turns the transmitter off after 15 minutes if none of the switches are pressed.
    - Plug the charging connector into the port at the top of the transmitter. Observe orientation and do not use force. A solid red LED indicates battery is charging. Once the internal battery is fully charged, the red LED will turn off and the green LED will turn on. A fully discharged unit will take up to 3 hours to recharge. Use only approved chargers. Transmitter will require charging every 20 – 30 days with constant use.
    - The transmitter and receiver should have been matched at the factory. If matching is required, see instructions with the transmitter.
5. PL Wireless transmitter: See PL Remote Operation section
6. Swing Arm Attachment: Grease annually

Section 4
Optional Accessories

Remote Control

DESCRIPTION

This receiver and remote (key fob) are a state-of-the-art microprocessor control system. It will provide the operator the ability to perform two functions – cylinder UP/Down and magnet ON/OFF by using toggle switches or by the wireless handheld remote. The toggle switches installed on the cylinder is a momentary three position toggle (up/off/ down) switch. The cylinder toggle switch is always off until operator institutes as command. The magnet toggle switch is a two-position switch (on/off).

The operator is required to follow all OSHA www.osha.gov and other applicable safety standards when operating the equipment.

The remote transmitter is equipped with four pushbuttons for the functions described above. This unit runs on standard CR2032 lithium button cell. This battery is often found in most garage door openers. In normal use, it provides several years of operation. When replacing it must be the same style battery.

Power must be applied to the receiver via the wire harness attached to your battery with the match Andersen connectors coming from the wire harness and the Lifter's power cord.

MAGNET SAFETY FEATURE

The key fob/toggle switch system has been designed to ensure operator safety. The toggle switch for the magnet always takes precedent. If it is initiated, the magnet button on the remote will not function if there are two operators. If one operator initiates the magnet with the remote and another turns on the toggle switch for the magnet, that switch has now taken control of the magnet. We eliminate the possibility of operator interference and create a safety hazard by unintentionally dropping the load.

SOUNDING ALARM

When lifting a cover, the system is designed to swing the cover away or back up the vehicle from the opening and lowering the lid to the surface. In a case when a cover is not lowered and released there is a "BUZZER" that sounds after holding the cover for two minutes. After the sounding of the "BUZZER" there will be 30 seconds the system will automatically drop the cover. If the operator does not lower the cover, it creates undo strain to the electrical system.

KEYFOB AND RECOVERY SYCRONIZATION

Each remote and key fob is designed to operate with a unique radio frequency. This feature allows multiple systems to work near one another without interference.

If a key fob becomes damaged and a new one is needed, the receiver can be paired and reprogrammed to respond to the new key fob.

The address is changed by **using a paper clip to press the CREATE_ADDR button on the board** through the hole on back of the case. When the button is depressed, an LED is illuminated on the front of the key fob, indicating that the address is being created. The address is randomized for as long as the button is held down.

When the button is released, the randomized address is saved and the LED begins flashing to indicate that the Control Permissions may now be set. To pair the key fob press learn button on the bottom of the receiver until the

LED is flashing. It is now it “learn mode.” Next, press any of the buttons on the key fob to initiate transmission. The key fob should now be paired with the receiver.

SUPPORT

For technical support, product information, spare parts, and updates please visit:

www.rock-safety.com

TW Remote Operation

P/N: 3A2035B
KIT, MICRO PROGRAMMABLE, 4 FUNCTION
INCLUDING:
1 EA 3A2033B TRANSMITTER
1 EA 3A0914B RECEIVER

ERROR CODES

RECEIVER ERROR CODE CHART

ERROR CODE	PROBABLE CAUSE
1	RF COMMUNICATION PROBLEM
2	FAULTY CIRCUIT TO OUTPUT 1
3	FAULTY CIRCUIT TO OUTPUT 2
4	FAULTY CIRCUIT TO OUTPUT 3
5	FAULTY CIRCUIT TO OUTPUT 4

ERROR CODE NUMBER IS THE NUMBER OF RED LIGHT BLINKS BETWEEN EVERY PAUSE.

TRANSMITTER ERROR CODE CHART

ERROR CODE	PROBABLE CAUSE
1	LOW BATTERY
2	FAULTY CIRCUIT TO OUTPUT 1
3	FAULTY CIRCUIT TO OUTPUT 2
4	FAULTY CIRCUIT TO OUTPUT 3
5	FAULTY CIRCUIT TO OUTPUT 4

ERROR CODE NUMBER IS THE NUMBER OF RED LIGHT BLINKS BETWEEN EVERY PAUSE.

NOTE:
TO ELIMINATE ERROR CODES FOR UNUSED OUTPUTS, SEE OUTPUT CONFIGURATION MANUAL OR INSTALL A 1K OHM 1/4 WATT RESISTOR (P/N: 210-003-1001) AS LOAD TO GROUND.

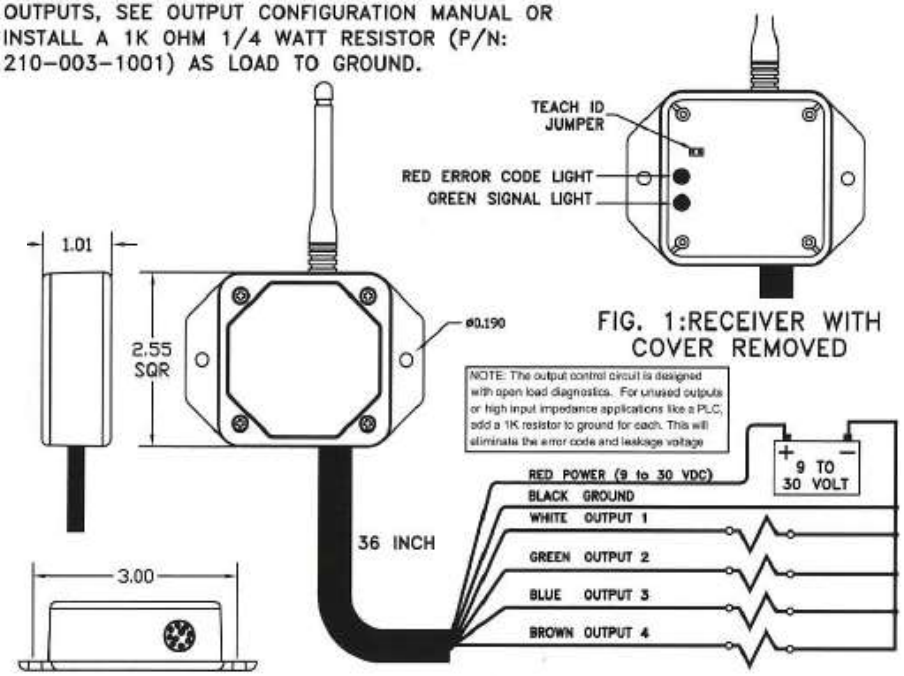

FIG. 1:RECEIVER WITH COVER REMOVED

P/N: 3A0914B
RECEIVER, 4 OUTPUT, PROGRAMMABLE

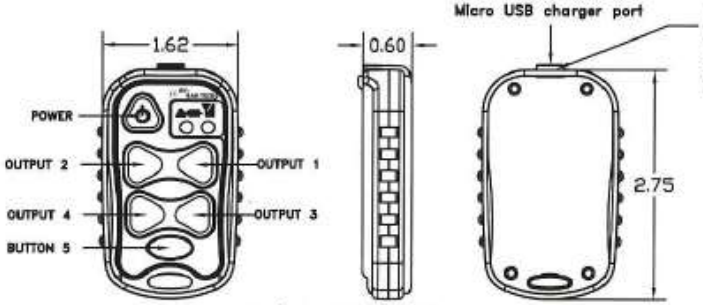

P/N: 3A2033B
TRANSMITTER, MICRO, 5 BUTTON

Only use approved chargers
MICRO WALL CHARGER/ 110-240VAC (B20172A)
MICRO CAR CHARGER/ 12-24VDC (B20173A)

OPERATION:
Press and hold the power button on the transmitter until both LEDs turn on, then release. The green LED will flash rapidly when communication has been established with the receiver. The LED flashes slowly if the receiver is off or there is no communication between the transmitter and receiver. Turn the receiver on and press the corresponding buttons on the transmitter keypad to turn on and off each of the outputs.

RECHARGING:
Plug the charging connector into the port at the top of the transmitter. Observe orientation and do not use force. A solid red LED indicates battery is charging. Once the internal battery is fully charged, the red LED will turn off and the green LED will turn on. A fully discharged unit will take up to 3 hours to recharge. Use only approved chargers.

INDICATOR LIGHTS:
The transmitter has two LED indicators, the red **BATTERY/DIAGNOSTIC** indicator and the green **TRANSMIT** indicator. The green **TRANSMIT** indicator flashes rapidly whenever there is communication between the transmitter and the receiver. The red **BATTERY/DIAGNOSTIC** indicator starts blinking once every second when the battery voltage is low and requires charging. It also blinks when there is a problem with the system in the form of an error code. Refer to the **ERROR CODE CHART** tables for more information.
Note: To check for low battery, turn the receiver off and leave the transmitter on. If the transmitter red LED continues to blink, the battery is low and requires charging. If the red LED blinks only when the receiver is on, count the number of blinks and refer to the ERROR CODE CHART tables for additional information.
Note: The red LED will stay on while charging and when the charge is completed the green LED will stay on.
Note: It will take longer to charge if the transmitter is on during charging.

TEACH ID CODE:
To synchronize a new transmitter and receiver together, refer to Fig. 1 and use the following procedure:
1. Remove receiver cover
2. Apply power to the receiver
3. Place a jumper across the TEACH ID jumper inside the receiver. Both green and red LEDs will toggle inside the receiver. Remove the jumper and store it on one pin
4. To get the transmitter into TEACH ID mode, press and hold the POWER button until both lights turns on, continue holding for 10 seconds until transmitter's green and red LEDs toggles.
5. Release the POWER button and wait for 1 second or until the green and red LEDs stop toggling and greenn light starts blinking rapidly.
6. Teach complete
7. Replace the cover on the receiver

OUTPUT CONFIGURATION PROGRAMMING:
The receiver is factory set to 4 momentary outputs. for output configurstion, refer to Operation & Installation manual for instructions on programming receiver functionality

SPECIFICATIONS:
Electrical:
- RF Transmit power (EIRP): 10 mW
- RF Frequency: 902-928 MHz
- Transmitter:
  - Power: Rechargeable 3.7V Lithium Polymer battery
  - Operation time with full charge: 30 to 40 hours continuous
- Receiver:
  - Power: 9 to 30 Volts DC
  - Outputs: 5A max each (20A system max)

Environmental:
- Transmitter: -20C to +60C
  - IP Rating: 66
- Receiver: -40C to +85C
  - IP Rating: 69K
- Vibration: 3G to 200Hz

This device complies with Part 15 of the FCC Rules. Operation is subject to the following two conditions: (1) this device may not cause harmful interference, and (2) this device must accept any interference received, including interference that may cause undesired operation.
Changes or modifications not expressly approved by Kar-Tech will void the user's authority to operate the equipment.

KAR-TECH Delafield, WI 53018	UNLESS TOLERANCE
SALES KIT, MICRO, PROGRAMMABLE, 4 FUNCTION	FRACTIONAL ± 1/8
CAD DRAWING DO NOT REVISE MANUALLY	ANGULAR ± 1/2 deg.
SCALE FULL · DRAWN HK · DATE 03-30-11 · 3A-203-5-B-3B	

TW Series
Camera / Monitor

Installation and Operations Instructions

Models included:
Camera: eCAMRVC-16
Monitor: eCAM7001

Mount camera on bracket located above the Lifter's cylinder - screws enclosed.

Monitor may be mounted on vehicle's dash or console.

Wiring Connection Diagram is enclosed. This application will require only two wires. **RED** is power and **BLACK** is ground. Disregard other wires.

Two - 5/16 eyelets are enclosed and will be soldered to wires after determining appropriate length while connecting to appropriate source.

Monitor cable will pass through vehicle's fire wall and zip tie loose cables when installation is completed.

Need support please visit www.rock-safety.com

WARNING

Monitor must be "powered off' at the end of each day.

Failure to do so will draw down battery charge.

eCAM

HIGH PERFORMANCE / DEPENDABLE / DURABLE

eCAM7001K

2 YEAR WARRANTY

Camera Operation

Monitor

Screen size: 7 Inch Digital LCD
Aspect Ratio: 16:9
Camera Inputs: 2
System: NTSC and PAL (Automatic Detection)
Resolution: 800 x R.G. B. x 480
Brightness 430cd/n2
Power Supply: 12-24V DC
Built-In Speaker
Heavy-duty Reverse Trigger
On Screen Display Menu
Adjustable: Contrast, Brightness and Color
Operating Temp: -4F to +158F

Kit includes eCAM7001 Monitor, eCAMRVC-16 Camera, 66ft Camera Cable and installation hardware.

Camera

Image Sensor: Color
TV System: NTSC
IP Rating: IP68
Vibration Rating: 10G
Infra-Red Night Vision: 50 ft
Resolution: Super Sharp 700HD TV Lines
Power Consumption: DC 12V (+/- 10%)
Operation Temperature: -30F to +158F
Lens Angle (Deg.) 120 Degrees
Built-In Heater

REARVIEW®

Rearview Systems, LLC
www.rearviewsystems.com
1-800-496-1590

IRONCLAD WARRANTY 2 YEAR

eCAM

Powered by Rearview Systems, LLC

Product Specification

Model No. ECLVM7000 7" Color LCD Monitor w/ 4 CH Input

The **eCAM** brand is exclusive from Rearview Systems, LLC and provides a unique, sleek yet sophisticated system to outlast the competition. The monitors and cameras are Guaranteed with an Ironclad 2 YEAR Warranty that will maximize your budget dollars and lower your risk with a state-of-the-art **eCAM** system..

The **Model# ECLVM7000** monitor features a high resolution 7 inch color display suitable for all vehicles. It incorporates features requested by some of our fleet customers and accommodates up to 4 cameras. Some additional features include: Expanded on-screen-display (OSD) control enables customized camera display and system useage, adjustable horizontal and vertical backing grid overlay, mirror/normal switchable image, selectable user operation for 7 languages, and multiple viewing options and comes with our **Ironclad 2 Year Warranty**.

Product Specification

Model No.	**ECBRM7000**
Monitor	7" High Resolution TFT Color Display
Input	4- camera input
Image	16:09
Color system	PAL/NTSC (auto switching)
Resolution	800 x R.G.B. x 480
Brightness	400cd/m²
Contrast	500:1
Power requirement	12-24V DC
Language	7 languages for selection
Power consumption	5W
Dimension (mm)	182 (L) x 124 (W) x 39 (D)
Operating temperature	-10° to +65°C
Storage temperature	-30° to +80°C
Certificate	CE,EMC,FCC,ISO9001：2008,E8

Monitor Features

- Digital High Resolution 384,000 pixel picture
- Adjustable horizontal and vertical backing grid
- Accepts up to 4 cameras
- Auto-on when vehicle is placed in reverse
- Electronic On-Screen-Display (OSD) Controls
- Each Camera Auto-ON/OFF Discrete Trigger
- Built-in Speaker
- "T" Slot adjustable monitor mount
- 2 Year Warranty

Product Specifications Subject to Change on 60 Day Notice.

eCAM

HIGH PERFORMANCE / DEPENDABLE / DURABLE

Button Menu

1. Dimmer
2. Camera
3. Mirror/Normal
4. Day/Night
5. Power
6. Menu
7. Down
8. Up
9. Infra-Red Remote

Connection Diagram:

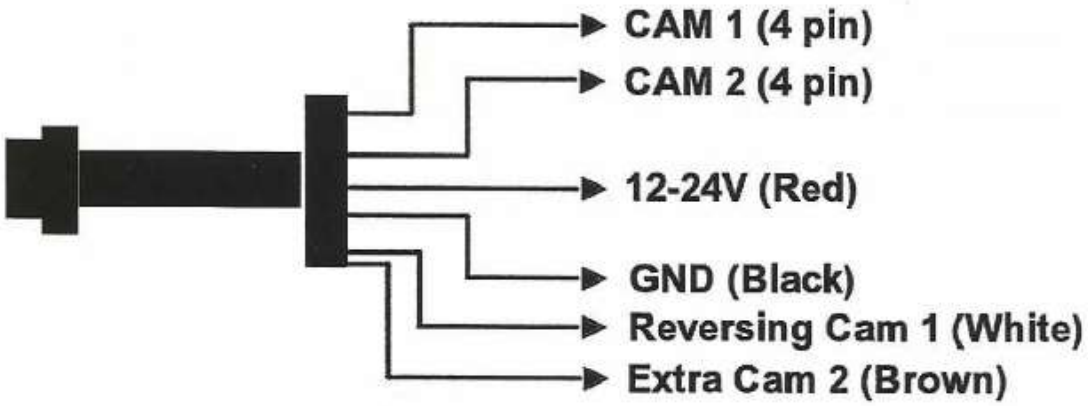

Installation suggestions:

Monitor should not be located in direct sunlight.

The white wire should be connected to 12V power source that is hot only when vehicle is placed in reverse. (Note: Do not connect to the Red wire as this will cause monitor to stay on all the time.) When the white wire receives power it will automaticlly turn on rear camera and monitor.

Please be sure all connections are tight to avoid moisture and corrosion of connectors. Shrink wrap if possible.

Connection Diagram:

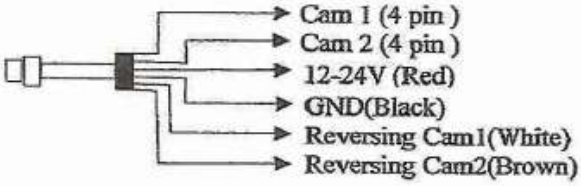

Button Menu

1. Dimmer
2. Camera
3. Mirror/Normal
4. Day/Night
5. Power
6. Menu
7. Down
8. Up
9. IR Remote

Monitor Specification:

. Screen size: 7 inch new TFT panel
. Aspect Ratio: 16:9 image
. Input: 2-way video input with 2 reversing cable
. System: PAL and NTSC auto switching
. Resolution: 800 x R.G.B x480
. Brightness: 430cd/m2
. Power supply: 12-24V DC
. Built-in speaker
. Operation Temperature: -20℃~+70℃.RH95% Max
. Storage Temperature: -30℃~+80℃.RH95% Max

Cable Specification:

. 4P lock connector cable

Accessories:

. 1pc Heat-shrink tube for camera connector

Camera Specification:

. Image Sensor : 1/3" CMOS
. TV System: NTSC/PAL
. IP Rating: IP 68
. Vibration Rate: 10G
. Night Vision function: available
. Audio function: available
. Effective Pixels: N: 510(H)×492(H) pixels
P: 500(H)×582(V) pixels
. Horizontal Resolution: 700 TV Line
. Video Output: 1.0vp-p, 75Ohm,
. Minimum Illumination: 0.1LUX/F1.2
. Built-in Lens: f: 2.8mm
. Power Consumption: DC 12V (+/-10%)
. Lens Angle (Deg.): 120°
. Operation Temperature: -20℃~+70℃.RH95% Max
. Storage Temperature: -30℃~+80℃.RH95% Max
. With heater

Rigid Swing Arm Attachment

Installation

The rigid swing arm can be installed wherever the 2" receiver is mounted and space is provided.

1. Slide the Lifter into the Swing Arm's extended receiver, pin or bolt into place.
2. Follow the wiring instructions provided with The Lifter.
3. Orange handle ball pins are provided to lock in dosed position or in 90-degree position for operation.
4. Wrap the rope handle around The Lifter frame, running one end through the loop and drawing snug. Use the loop on the other encl as a handle.
5. Test all functions, make adjustments as needed.

Operation

1. Remove the pin that holds the Swing Arm next to the vehicle.
2. Swing The Lifter out in position over the cover or grate (rope handle is to move the Swing Arm while keeping feet clear).
3. Lower the magnet, energize, and lift cover just high enough to clear the casting and the street.
4. Swing out of the way and lower the cover or grate.
5. When your work is done, lift the cover or grate and swing back into position and lower.
6. Lock the Swing Arm back into place with the pin to the vehicle before moving the vehicle.

Safety and Maintenance

1. Keep hands and feet clear while in operation.
2. Grease fittings as needed (The Swing Arm will be greased at factory}

Tips

1. If the vehicle was not moved, the cover or grate should swing right back into position.

2. When lowering the cover or grate, you can use a hook or your foot to guide but be sure to keep your feet from under the cover or grate.

3. Be careful not to jar the cover or grate loose from the magnet when moving to position.

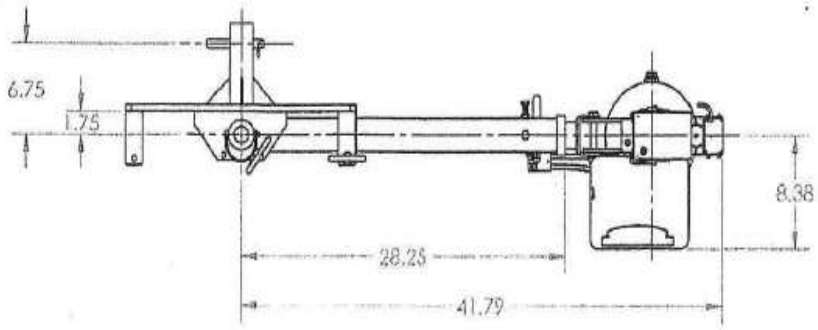

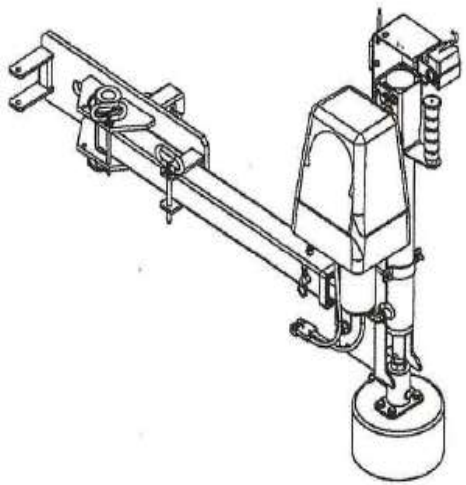

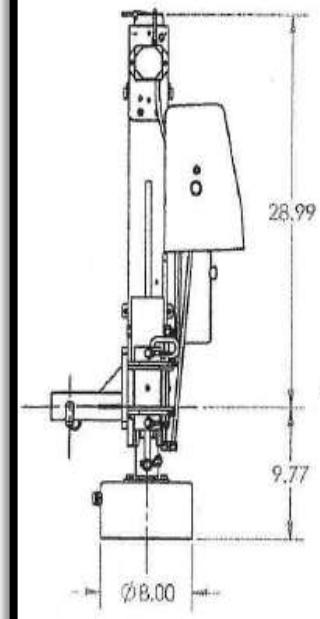

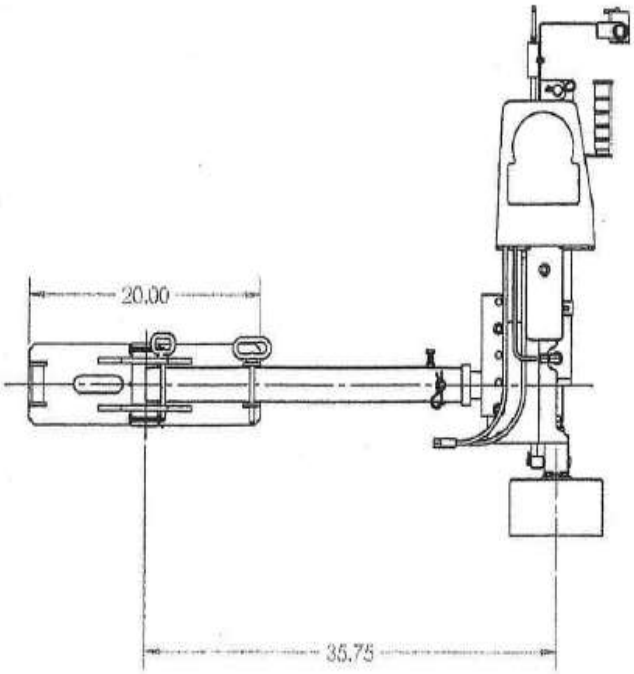

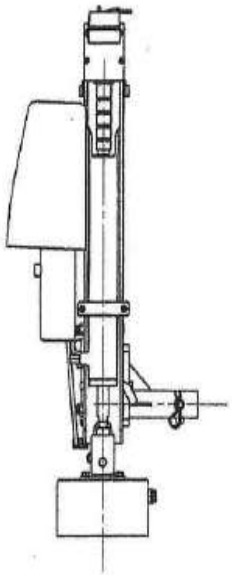

DRAWN / DATE	PROPERTY OF: **IRONWOOD 53** 2551 320th St. ROCK VALLEY, IA 51247 (712) 451-4553
CHECKED / DATE	
QTY: LBS./FT.	TITLE:
P-WEIGHT:	
DO NOT SCALE DRAWING	

PROPRIETARY AND CONFIDENTIAL
THE INFORMATION CONTAINED IN THIS DRAWING IS THE SOLE PROPERTY OF IRONWOOD 53. ANY REPRODUCTION IN PART OR AS A WHOLE WITHOUT THE WRITTEN PERMISSION OF IRONWOOD 53 IS PROHIBITED.

UNLESS OTHERWISE SPECIFIED:
DIMENSIONS ARE IN INCHES
TOLERANCES:
ANGULAR: MACH ± .1° BEND ±.5°
TWO PLACE DECIMAL ±.01

MATERIAL	AS NOTED		
SCALE: 1:10	SIZE B	DWG. NO. LIFTER ASM	

Folding Swing Arm Attachment

Installation

The folding swing arm can be installed wherever the 2" receiver is mounted, and space is provided.

1. Slide the Lifter into the Swing Arm's extended receiver, pin or bolt into place.
2. Follow the wiring instructions provided with The Lifter.
3. Orange ball pins are provided to lock in closed position or in 90-degree position for operation.
4. Wrap the rope handle around The Lifter frame, running one end through the loop and drawing snug. Use the loop on the other encl as a handle.
5. Test all functions, adjust as needed.

Operation

1. Remove the pin that holds the Swing Arm next to the vehicle.
2. Swing The Lifter out in position over the cover or grate (rope handle is to move the Swing Arm while keeping feet clear).
3. Lower the magnet, energize, and lift cover just high enough to clear the casting and the street.
4. Swing out of the way and lower the cover or grate.
5. When your work is done, lift the cover or grate and swing back into position and lower.
6. Lock the Swing Arm back into place with the pin to the vehicle before moving the vehicle.

Safety and Maintenance

1. Keep hands and feet clear while in operation.
2. Grease fittings as needed (The Swing Arm will be greased at factory}

Tips

1. If the vehicle was not moved, the cover or grate should swing right back into position.
2. When lowering the cover or grate, you can use a hook or your foot to guide but be sure to keep your feet from under the cover or grate.
3. Be careful not to jar the cover or grate loose from the magnet when moving to position.

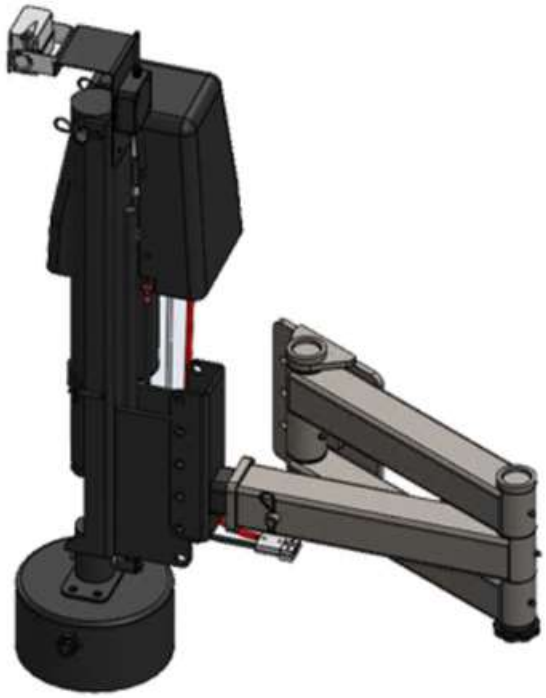

Grate Attachment

Installation

1. Lower the magnet to surface level.
2. Remove the 4 bolts attaching the magnet to the cylinder.
3. Slide the Grate Attachment (handle facing forward) between cylinder and magnet matching the four-bolt footprint.

Operation

1. Approach the grate you desire to pull with "The Lifter" stopping at the center of the grate,
2. Lower the magnet to the grate.
3. Release the manual handle by pulling the spring-loaded pin and move the handle as far to the right as possible.
4. install the hooks on both sides of the grate then bring the tail end of the chain and drape them into the slots.
5. Activate the magnet and proceed to pull the grate up.
6. Once the grate has cleared the surface, move the grate away from the opening - lower it to the surface and deactivate the magnet while performing desired tasks.
7. To replace grate, activate the magnet and move it over the opening again. Lower the grate with “The Lifter" (while magnet is deactivated) into the desired space. Remove the chains and keep them and the hooks inside the vehicle.
8. Congratulations - mission accomplished.

The purpose of the grate attachment is **NOT** to lift the grate. It is to provide stability, control and safety.

Grates have less metal adhesion area for the magnet, hence, requiring extra precautions especially on uneven surfaces.

Section 5
References

Parts & Service

Part No.	*Description*
AR-10	Alignment Rod
PC-10/20	Andersen Connector
BP-10	Bent Pin
CC-10	Circuit Breaker
CM-10	Camera Mount
CP-25	Cylinder Pin
CS-10	Cylinder Strap
P-13	Curley Cord (Yellow)
P-20a	Camera / Monitor
P-32	Cylinder
DP-34	Dent Pin (4”)
DC-30	Dust Cover
EY-20	Eyelets (Copper)
P-42	Frame (Lifter)
P-15	Frame Riser
HD-15	Handle
FL-10	Fluid Lines
P-12/20	Magnet (TW or PL)
P-31	Magnet Bracket
MC-10	Motor Cover
OL-10	Oil (ATF)
TW-10	Power Cord (4 GA.)
PL-20	Power Cord (6 GA.)
P-32	Power Unit
W-35	Receiver (TW/PL)
WT-30	Remote (KT/RME)
SL-10	Solenoid
SB-10	Swivel Bracket
WB-10	Weather Boot
AC-10	Wire Quick Connectors

500 Series

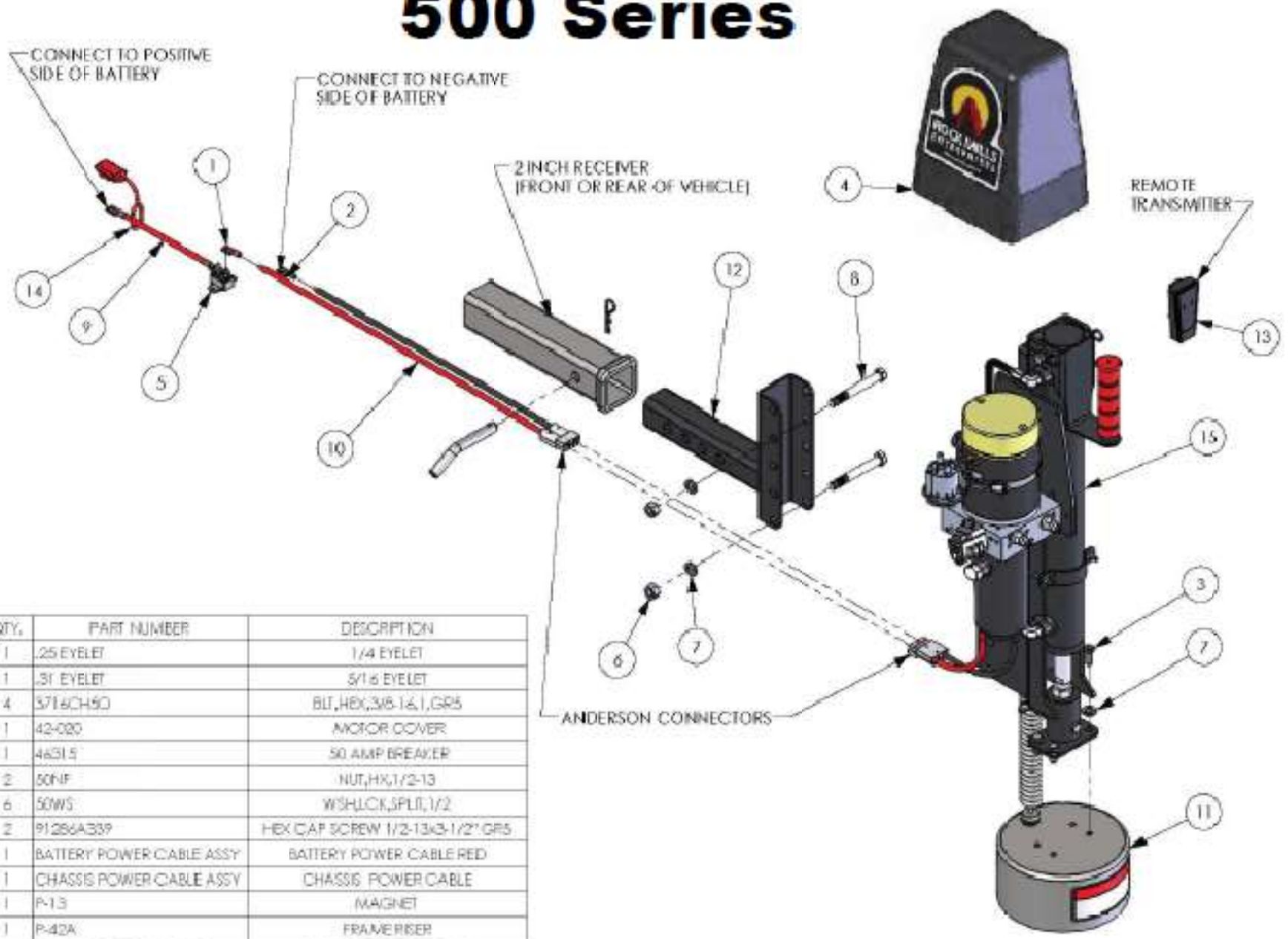

ITEM NO.	QTY.	PART NUMBER	DESCRIPTION
1	1	.25 EYELET	1/4 EYELET
2	1	.31 EYELET	5/16 EYELET
3	4	5716CH50	BLT,HEX,3/8-16,1,GR5
4	1	42-020	MOTOR COVER
5	1	4631.5	50 AMP BREAKER
6	2	50NF	NUT,HX,1/2-13
7	6	50WS	WSH,LCK,SPLIT,1/2
8	2	91286A339	HEX CAP SCREW 1/2-13X3-1/2" GR5
9	1	BATTERY POWER CABLE ASSY	BATTERY POWER CABLE RED
10	1	CHASSIS POWER CABLE ASSY	CHASSIS POWER CABLE
11	1	P-13	MAGNET
12	1	P-42A	FRAME RISER
13	1	REMOTE CONTROL FAUB	REMOTE CONTROL FAUB
14	1	TERMINAL COVER RED	TERMINAL COVER RED
15	1	TW500	TW500 FRAME ASSEMBLY

TW500 INSTALLATION

500 Actuator Assembly

ITEM NO.	QTY.	PART NUMBER	DESCRIPTION
1	2	1008CSP	10-24 SOCKET HEAD CAP SCREW
2	1	100NJ	HEX JAM NUT 1-8 NC
3	2	10NF	10-24 HEX NUT
4	2	10WS	REGULAR SPLIT LOCKWASHER #10
5	2	1408CH5O	BLT,HX,1/4-20,1/2,GR5
6	2	14NF	FINISHED HEX NUT 1/4-20
7	1	2 X 18 CYLINDER	HYDRAULIC CYLINDER
8	2	25WI	1/4 INTERNALTOOTH LOCK WASHER
9	3	3112CH316	HEX CAP SCREW 5/16-18 x 3/4" SS316
10	3	31WI	5/16 INTERNAL TOOTH LOCK WASHER
11	4	52215K457	HYD, COMPRESSION ELBOW
12	1	EXTEND HYD FLEX TUBE	FLEX TUBING
13	1	EXTEND HYD TUBE	EXTEND HYD TUBE
14	1	MC98330A325	CLEVIS PIN
15	2	MC98335A067	HAIR PIN
16	1	MC98335A069	HAIR PIN
17	1	PIN	CYLINDER PIN
18	1	POWER CABLE ASSY	POWER CHORDS
19	1	REMOTE CONTROL RECIEVER	REMOTE CONTROL RECIEVER
20	1	RETRACT HYD FLEX TUBE	FLEX TUBING
21	1	RETRACT HYD TUBE	RETRACT HYD TUBE
22	1	RM4.5 Power Unit Assy	MOTOR
23	1	RME0005	ALIGNMENT ROD
24	1	RME0007	MAGNET MOUNT
25	1	RME10010	CYLINDER BRACKET
26	1	RME10011	CYLINDER SWIVEL BRACKET MOUNT
27	1	RME10013	FRAME BRACKET
28	1	RME10016	MNT,CAMERA,UNIVERSAL
29	1	RME50005	LIFTER HANDLE OPTION

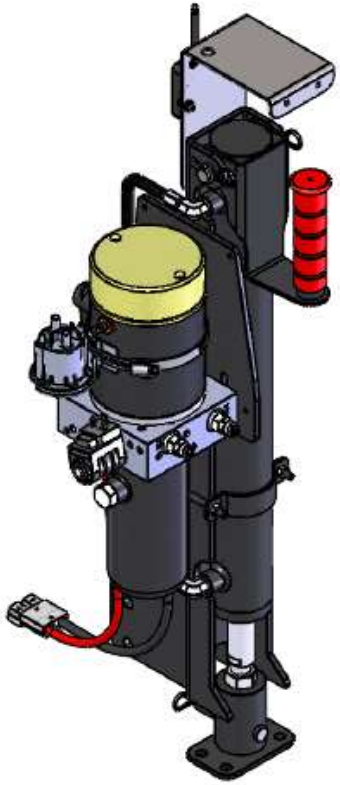

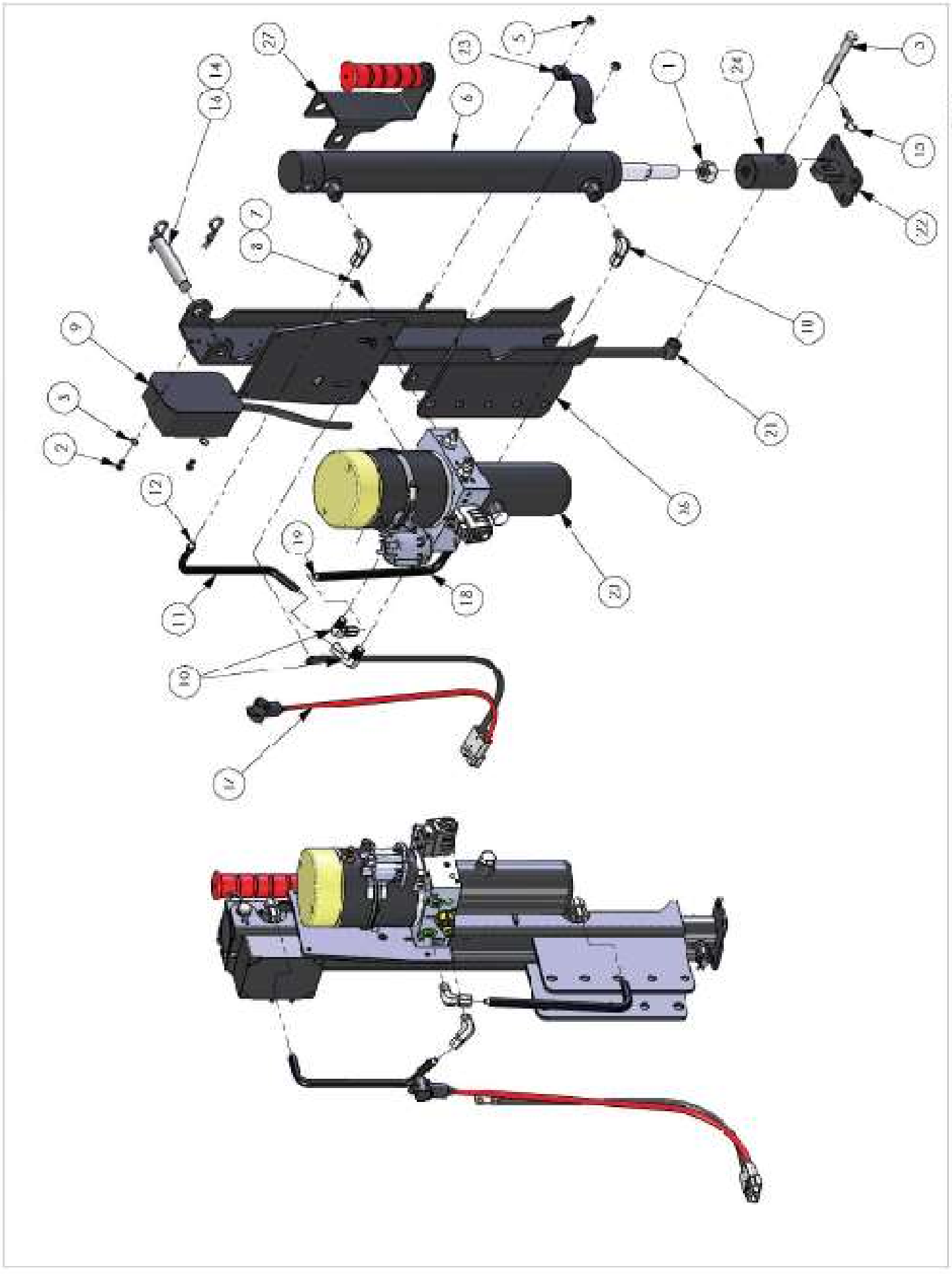

3000 Series

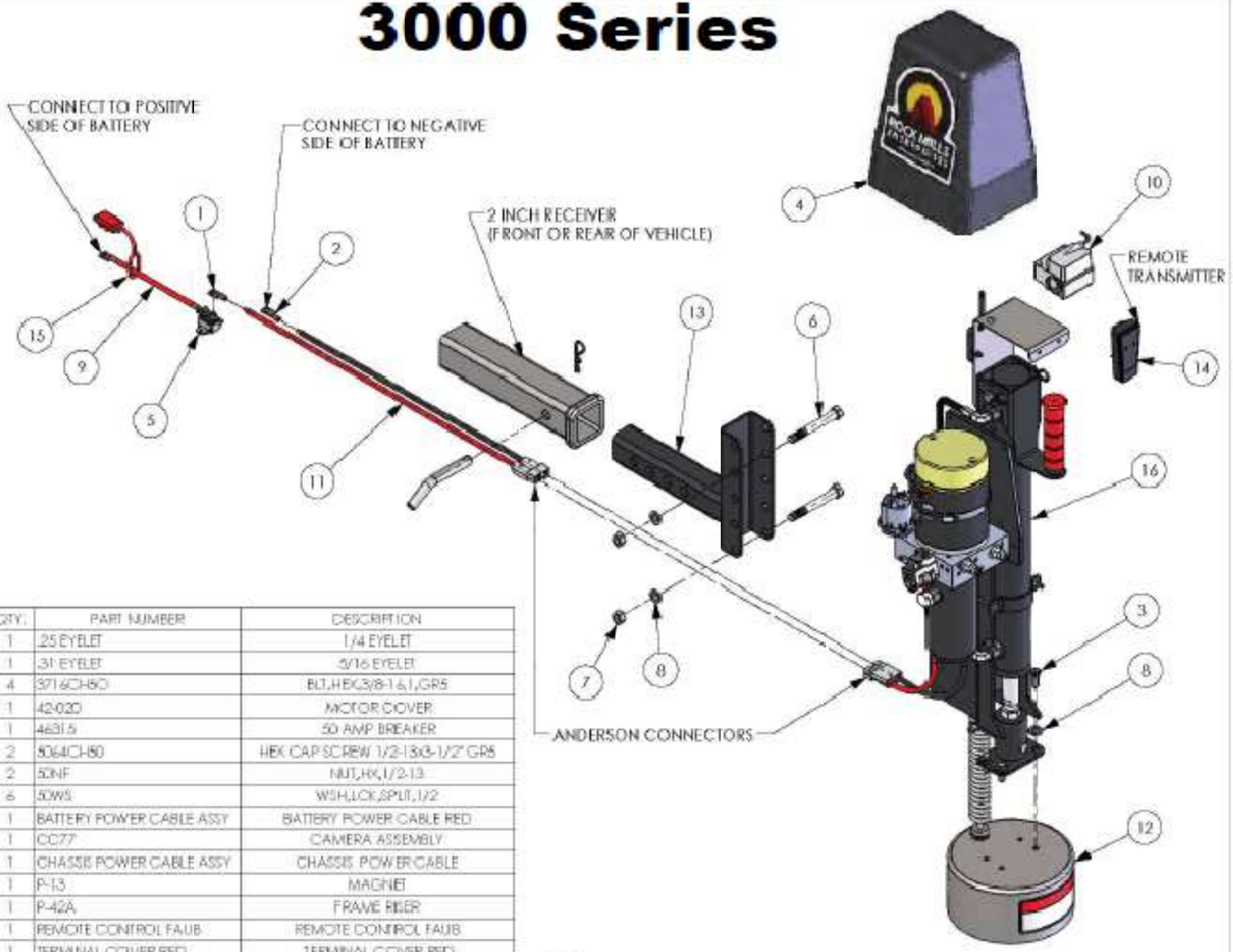

ITEM NO.	QTY.	PART NUMBER	DESCRIPTION
1	1	.25 EYELET	1/4 EYELET
2	1	.31 EYELET	5/16 EYELET
3	4	3716CH50	BLT,HEX,3/8-16,1,GR5
4	1	42-020	MOTOR COVER
5	1	4631.5	50 AMP BREAKER
6	2	5064CH50	HEX CAP SCREW 1/2-13X3-1/2" GR5
7	2	50NF	NUT,HX,1/2-13
8	6	50WS	WSH,LCK,SPLIT,1/2
9	1	BATTERY POWER CABLE ASSY	BATTERY POWER CABLE RED
10	1	CC77	CAMERA ASSEMBLY
11	1	CHASSIS POWER CABLE ASSY	CHASSIS POWER CABLE
12	1	P-13	MAGNET
13	1	P-42A	FRAME RISER
14	1	REMOTE CONTROL FAUB	REMOTE CONTROL FAUB
15	1	TERMINAL COVER RED	TERMINAL COVER RED
16	1	TW3000	TW3000 FRAME ASSEMBLY

3000 Actuator Assembly

ITEM NO.	QTY.	PART NUMBER	DESCRIPTION
1	1	100NJ	HEX JAM NUT 1-8 NC
2	2	1408BHCS	1/4-20 BUTTON HCS X .50
3	4	25WI	1/4 INTERNALTOOTH LOCK WASHER
4	2	1408CH50	BLT,HX,1/4-20,1/2,GR5
5	3	14NF	FINISHED HEX NUT 1/4-20
6	1	2 X 18 CYLINDER	HYDRAULIC CYLINDER
7	3	31WI	5/16 INTERNAL TOOTH LOCK WASHER
8	3	3112CH316	HEX CAP SCREW 5/16-18 x 3/4" SS316
9	1	3A107	REMOTE CONTROL RECIEVER
10	4	52215K457	HYD, COMPRESSION ELBOW
11	1	EXTEND HYD FLEX TUBE	FLEX TUBING
12	1	EXTEND HYD TUBE	EXTEND HYD TUBE
13	1	MC98330A325	CLEVIS PIN
14	2	MC98335A067	HAIR PIN
15	1	MC98335A069	HAIR PIN
16	1	PIN	CYLINDER PIN
17	1	POWER CABLE ASSY 4GA	POWER CHORDS
18	1	RETRACT HYD FLEX TUBE	FLEX TUBING
19	1	RETRACT HYD TUBE	RETRACT HYD TUBE
20	1	RM4.5 Power Unit Assy	MOTOR
21	1	RME0005	ALIGNMENT ROD
22	1	RME0007	MAGNET MOUNT
23	1	RME10010	CYLINDER BRACKET
24	1	RME10011	CYLINDER SWIVEL BRACKET MOUNT
25	1	RME10013	FRAME BRACKET
26	1	RME10016	MNT,CAMERA,UNIVERSAL
27	1	RME50005	LIFTER HANDLE OPTION

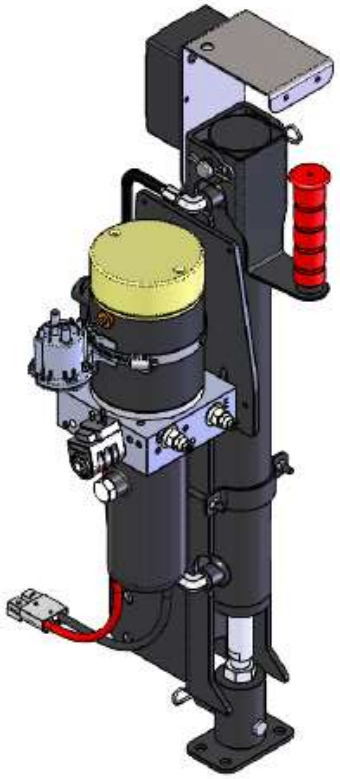

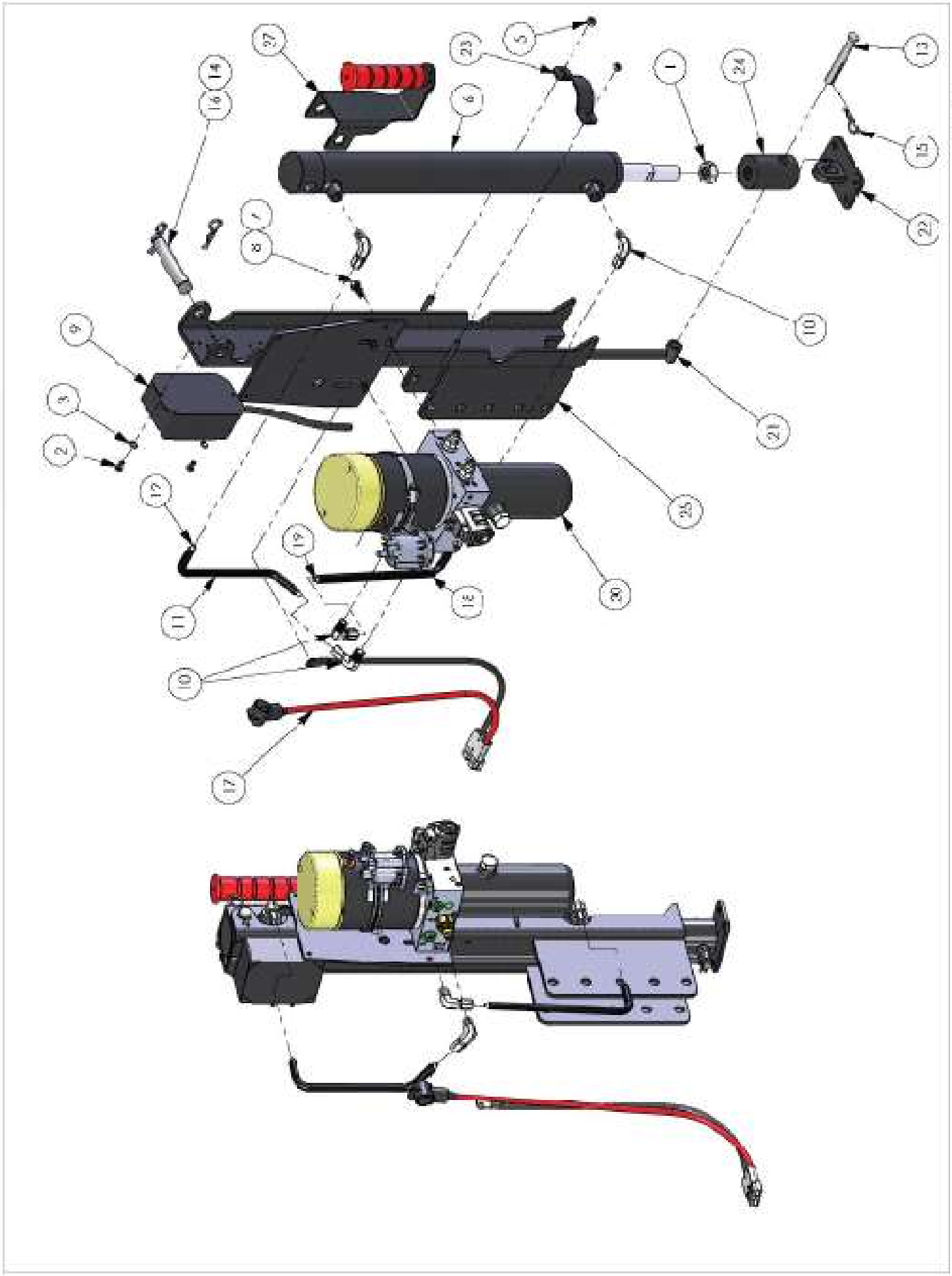
P-500

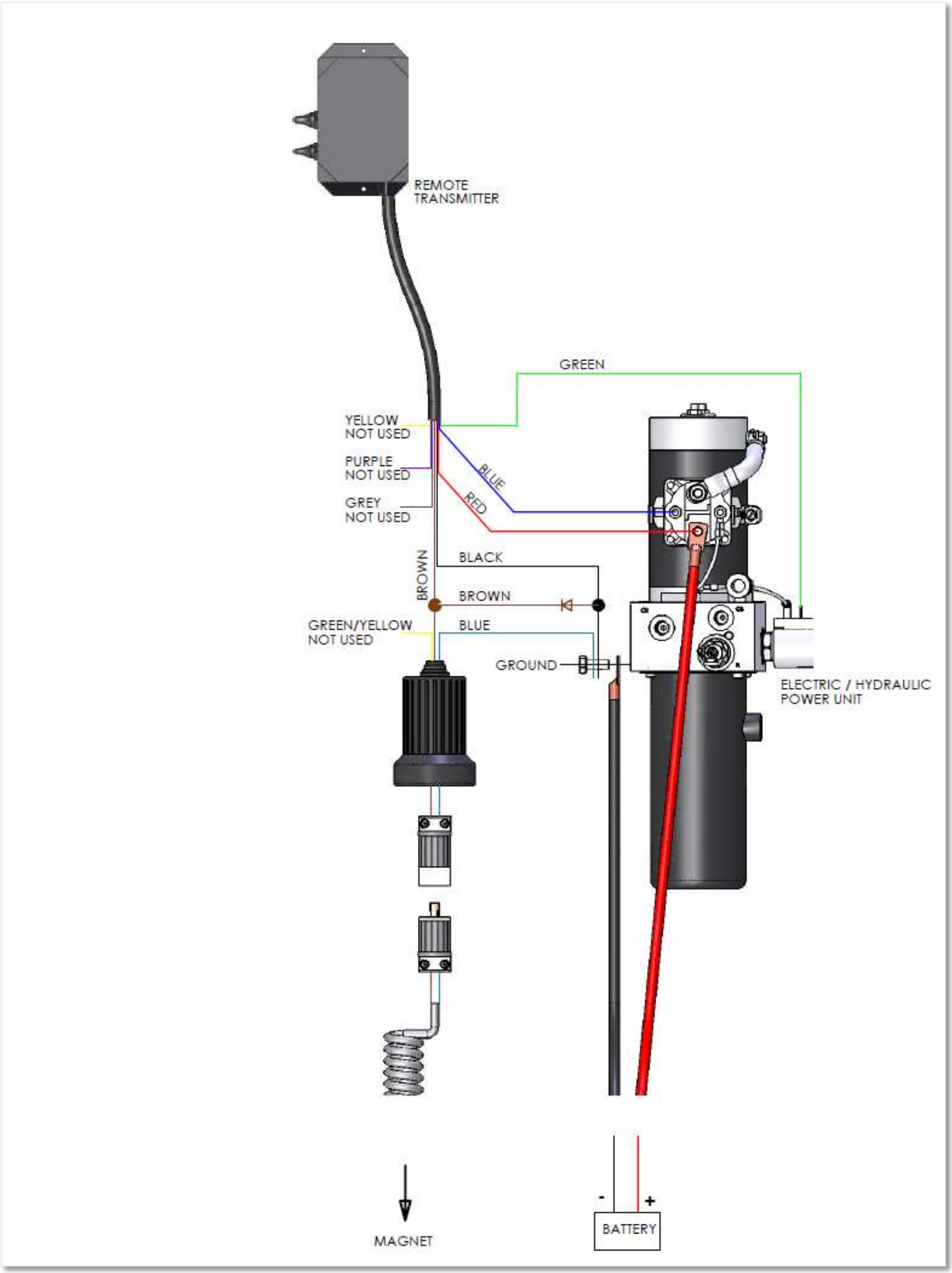
REMOTE
TRANSMITTER
GREEN
YELLOW
NOT USED
PURPLE
NOT USED
GREY
NOT USED
BLUE
RED
BROWN
BLACK
BROWN
GREEN/YELLOW
NOT USED
BLUE
GROUND
ELECTRIC / HYDRAULIC
POWER UNIT
MAGNET
-
+
BATTERY

WARRANTY

Rock Safety LLC warrants to the initial purchaser of a new Lifter and Accessories, direct or from an authorized Lifter dealer, that the product and components thereof manufactured by Rock Safety LLC, are free from defects in material and workmanship at time of shipment. Rock Safety LLC further warrants to such purchaser that each new Lifter will perform properly without structural or operational failure if the product is assembled and mounted in accordance with The Lifter instruction and drawing and is maintained as described in the Owner's Manual.

WARRANTY PERIOD

The above warranty shall be effective for a period of one year on workmanship and materials from the date of delivery by The Lifter dealer to the initial purchaser.

PURCHASER'S REMEDIES

If a warranted Lifter component fails to conform to the above warranty during the one year warranty period, Rock Safety LLC will furnish the parts necessary to correct such failure, provided that Rock Safety LLC is notified, directly or through the selling representative, within 30 days of the discovery of the failure. All warranty submissions must include the original part in question, along with a properly filled out claim sheet, before a warranty award will be made. Rock Safety LLC will pay the common carrier freight expense of parts to and from the owner. Faster freight service is available, with the owner paying the difference in cost between common carrier and preferred method by owner. Freight of whole goods to or from Rock Safety LLC is at the owner's expense, regardless if they fall under the warranty or not. All warranty decisions will be final!

EXCLUSIONS

This warranty shall not apply to component parts or accessories of products not manufactured by Rock Safety LLC and which carry the warranty of the manufacturer thereof. Items of high wear and regular maintenance shall not be covered under this warranty. This warranty shall be void if any part or parts not manufactured by Rock Safety LLC are used either in maintaining or servicing of the products covered by this warranty. No warranty whatsoever is made on used secondhand, altered, or rebuilt machinery.

THE OWNERS WARRANTY REGISTRATION MUST BE RECEIVED BY ROCK SAFETY LLC OR AN AUTHORIZED ROCK SAFETY LLC DEALER WITHIN 30 DAY OF DELIVERY OR ALL WARRANTY IS NULL AND VOID.

THIS WARRANTY IS EXTENDED TO THE INITIAL PURCHASER MAY NOT BE REASSIGNED. THIS WARRANTY IS EXPRESSLY IN LIEU OF ANY OTHER WARRANTIES EXPRESSED OR IMPLIED, INCLUDING ANY IMPLIED WARRANTIES OF MERCHANTABILITY OR FOR A PARTICULAR PURPOSE AND ROCK SAFETY LLC NEITHER ASSUMES OR AUTHORIZES ANY OTHER PERSON TO ASSUME FOR IT ANY OTHER LIABILITY. THERE ARE NO WARRANTIES WHICH EXTEND BEYOND THE DESCRIPTION ON THE FACE THEROF.

We reserve the right to make improvements to any of our products without notice of obligation regarding models previously sold.